Menu

HONDA

GX120 · GX160 · GX200

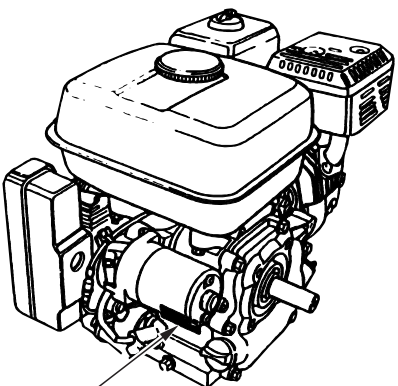

Serial number and engine type

OWNER'S MANUAL

CE

32ZH7620

00X32-ZH7-6201

HONDA EUROPE N.V.(EEC)

www.honda-engines-eu.com

Thank you for purchasing a Honda engine.

This manual covers the operation and maintenance of your engine:
GX120 · GX160 · GX200

All information in this publication is based on the latest product information available at the time of printing.

Honda Motor Co., Ltd. reserves the right to make changes at any time without notice and without incurring any obligation.

No part of this publication may be reproduced without written permission.

This manual should be considered a permanent part of the engine and should remain with it if it is resold.

Pay special attention to statements preceded by the following words:

⚠WARNING **Indicates a strong possibility of severe personal injury or death if instructions are not followed.**

CAUTION: **Indicates a possibility of personal injury or equipment damage if instructions are not followed.**

NOTICE **Indicates that equipment or property damage can result if instructions are not followed.**

NOTE: Gives helpful information.

If a problem should arise, or if you have any questions about your engine, consult an authorized Honda dealer.

⚠WARNING

The Honda engine is designed to give safe and dependable service if operated according to instructions. Read and understand the Owner's Manual before operating the engine. Failure to do so could result in personal injury or equipment damage.

1 SAFETY INSTRUCTIONS

⚠WARNING

To ensure safe operation—

- **Honda engine is designed to give safe and dependable service if operated according to instructions. Read and understand the Owner's Manual before operating the engine. Failure to do so could result in personal injury or equipment damage.**

- **Always make a pre-operation inspection (page 6) before you start the engine. You may prevent an accident or equipment damage.**
- **To prevent fire hazards and to provide adequate ventilation, keep the engine at least 1 meter (3 feet) away from buildings and other equipment during operation. Do not place flammable objects close to the engine.**
- **Children and pets must be kept away from the area of operation due to a possibility of burns from hot engine components or injury from any equipment the engine may be used to operate.**
- **Know how to stop the engine quickly, and understand the operation of all controls. Never permit anyone to operate the engine without proper instructions.**
- **Do not place flammable objects such as gasoline, matches, etc., close to the engine while it is running.**
- **Refuel in a well-ventilated area with the engine stopped. Gasoline is highly flammable and explosive under certain conditions.**
- **Do not overfill the fuel tank. There should be no fuel in the filler neck.**
  Make sure that the filler cap is closed securely.
- **If any fuel is spilled, clean it up completely and allow petroleum vapours to dissipate before starting the engine.**
- **Do not smoke or allow flames or sparks where the engine is refueled or where gasoline is stored.**
- **Exhaust gas contains poisonous carbon monoxide. Avoid inhalation of exhaust gases. Never run the engine in a closed garage or confined area.**
- **Place the engine on a stable surface. Do not tilt the engine more than 20° from horizontal. Operating at excessive angles may result in fuel spillage.**

SAFETY INSTRUCTIONS

⚠WARNING

To ensure safe operation—

- **Do not place anything on the engine, as it may create a fire hazard.**
- **A spark arrester is available as an optional part for this engine. It is illegal in some areas to operate an engine without a spark arrester. Check local laws and regulations before operating.**
- **The muffler becomes very hot during operation and remains hot for a while after stopping the engine. Be careful not to touch the muffler while it is hot. To avoid severe burns or fire hazards, let the engine cool before transporting it or storing it indoors.**

SAFETY LABEL LOCATION

This label warns you of potential hazards that can cause serious injury. Read it carefully.

If the label comes off or becomes hard to read, contact your Honda dealer for replacement.

READ OWNER'S MANUAL

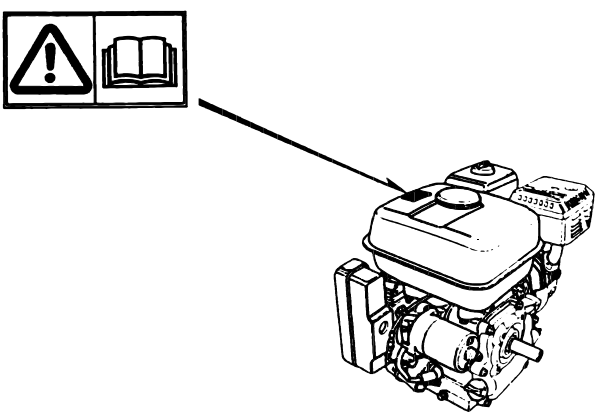

2 BATTERY CONNECTIONS (for electric starter)

Use a 12 volt battery with an ampere-hour rating of at least 18 AH.
Connect the battery positive (+) cable to the starter solenoid terminal, as shown.
Connect the battery negative (−) cable to an engine mounting bolt, frame bolt, or other good engine ground connection.
Check the battery cable connections to be sure the cables are tightened and free of corrosion. Remove any corrosion, and coat the terminals and cable ends with grease.

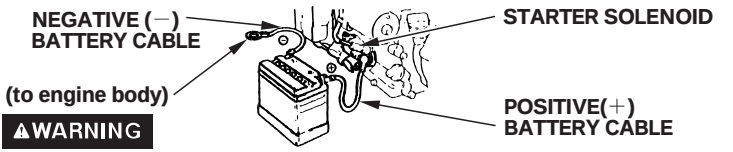

⚠WARNING

- **The battery gives off explosive gases; keep sparks, flames and cigarettes away. Provide adequate ventilation when charging or using batteries in an enclosed space.**
- **The battery contains sulfuric acid (electrolyte). Contact with skin or eyes may cause severe burns. Wear protective clothing and a face shield.**
  - **If electrolyte gets on your skin, flush with water.**
  - **If electrolyte gets in your eyes, flush with water for at least 15 minutes and call a physician immediately.**
- **Electrolyte is poisonous.**
  - **If swallowed, drink large quantities of water or milk and follow with milk of magnesia or vegetable oil and call a physician immediately.**
- **KEEP OUT OF REACH OF CHILDREN.**

NOTICE

- **Use only distilled water in the battery. Tap water will shorten the service life of the battery.**
- **Filling the battery above the UPPER LEVEL line may cause the electrolyte to overflow, resulting in corrosion to engine or nearby parts. Immediately wash off any spilled electrolyte.**
- **Be careful not to connect the battery in reverse polarity, as this will short circuit the battery charging system and trip the circuit breaker.**

3 PRE-OPERATION CHECK

1. Engine oil level

CAUTION:

- **Running the engine with insufficient oil can cause serious engine damage.**
- **Be sure to check the engine on a level surface with the engine stopped.**

1. Remove the oil filler cap and wipe the dipstick clean.
2. Insert the dipstick into the oil filler neck, but do not screw it in.
3. If the level is low, fill to the top of the oil filler neck with the recommended oil.

Use Honda 4-stroke, or an equivalent high detergent, premium quality motor oil certified to meet or exceed U.S. automobile manufacturer's requirements for service classification SG, SF. Motor oils classified SG, SF will show this designation on the container.
SAE 10W-30 is recommended for general, all temperature use. If single viscosity oil is used, select the appropriate viscosity for the average temperature in your area.

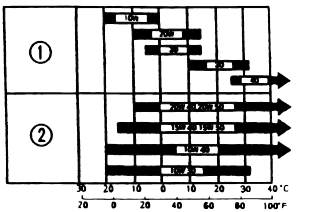

Ambient temperature

① SINGLE VISCOSITY
② MULTI VISCOSITY

CAUTION:
Using nondetergent oil or 2-stroke engine oil could shorten the engine's service life.

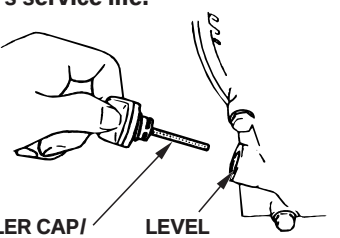

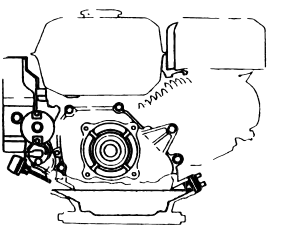

2. Reduction gear oil

Check reduction gear oil level.
Fill with SG, SF rated engine oil, if necessary.

〈**1/2 reduction with automatic centrifugal clutch**〉

1. Remove the oil filler cap and wipe the dipstick clean.
2. Insert the dipstick into the filler neck but do not screw it in.
3. If the level is low, fill to the upper level mark with the same oil recommended for the engine (see engine oil recommendations on page 6).

Oil capacity: 0.50 ℓ (0.53 US qt , 0.44 Imp qt)

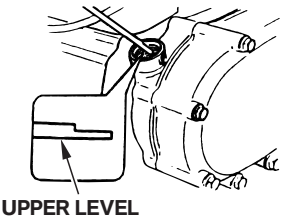

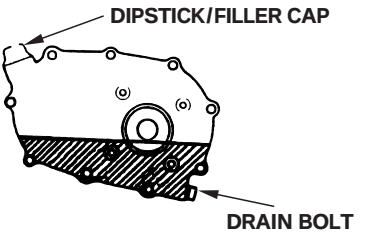

〈**1/6 reduction**〉

1. Remove the oil level bolt.
2. Check the oil level; it should reach the edge of the oil level bolt hole. If the oil level is low, remove the filler bolt, and add oil until it starts to flow out the oil level bolt hole. Use the same oil recommended for the engine (see engine oil recommendations on page 6).
3. Install the oil level bolt and filler bolt. Tighten them securely.

Oil capacity: 0.15 ℓ (0.16 US qt , 0.13 Imp qt)

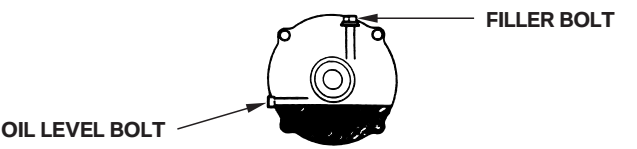

3. Air cleaner

CAUTION:

Never run the engine without the air cleaner. Rapid engine wear will result.

〈**Dual element type**〉

1. Check the air cleaner elements to be sure they are clean and in good condition.
2. Clean or replace the elements if necessary (page 21).

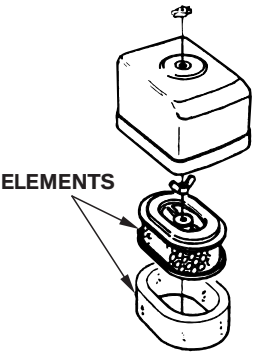

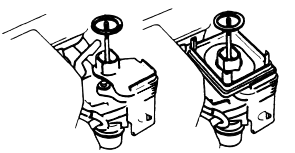

(GX120/160) (GX120/160/200)

〈**Cyclone type**〉

1. Check cleaner for dirt or obstruction of elements.
2. Check the cyclone housing for any dirt build-up, clean it, if necessary (page 22).

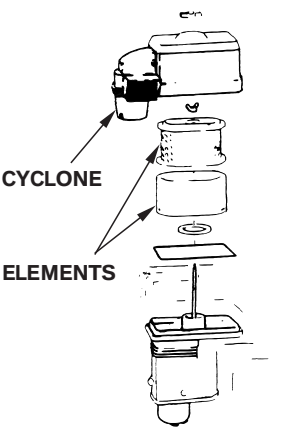

〈**Semi-dry type**〉
Check cleaner for dirt or obstruction of element (page 23).

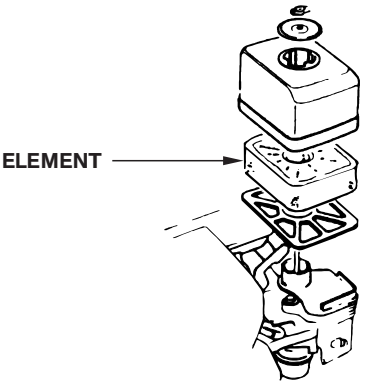

〈**Oil bath type**〉
1. Check the air cleaner element to be sure it is clean and in good condition. Clean or replace the element if necessary (page 23).
2. Check oil level and condition.

CAUTION:
Never run the engine without the air cleaner. Rapid engine wear will result.

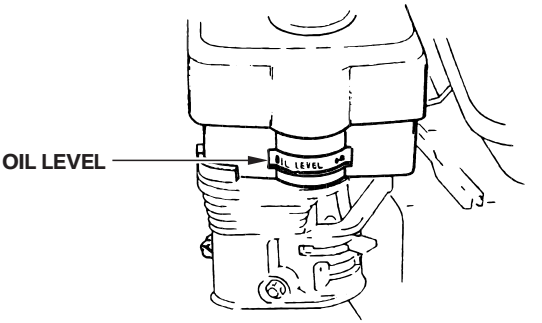

4. Fuel

Use automotive gasoline (Unleaded or lowleaded is preferred to minimize combustion chamber deposits).
FOR NEW SOUTH WALES ONLY:
Use unleaded fuel only.
Never use an oil/gasoline mixture or dirty gasoline. Avoid getting dirt, dust or water in the fuel tank.

⚠WARNING

- **Gasoline is extremely flammable and is explosive under certain conditions.**
- **Refuel in a well-ventilated area with the engine stopped. Do not smoke or allow flames or sparks in the area where the engine is refueled or where gasoline is stored.**
- **Do not overfill the fuel tank (there should be no fuel in the filler neck). After refueling, make sure the tank cap is closed properly and securely.**
- **Be careful not to spill fuel when refueling. Spilled fuel or fuel vapor may ignite. If any fuel is spilled, make sure the area is dry before starting the engine.**
- **Avoid repeated or prolonged contact with skin or breathing of vapor.**
  KEEP OUT OF REACH OF CHILDREN.

Fuel tank capacity:	GX120…	2.5 ℓ (0.66 US gal , 0.55 Imp gal)
	GX160…	3.6 ℓ (0.95 US gal , 0.79 Imp gal)
	GX200…	3.6 ℓ (0.95 US gal , 0.79 Imp gal)

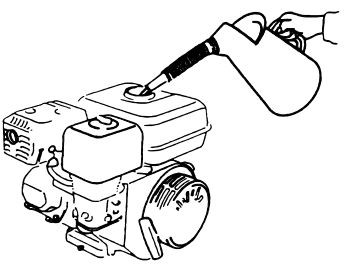

GASOLINES CONTAINING ALCOHOL

If you decide to use a gasoline containing alcohol (gasohol), be sure it's octane rating is at least as high as that recommended by Honda. There are two types of ''gasohol'': one containing ethanol, and the other containing methanol. Do not use gasohol that contains more than 10% ethanol. Do not use gasoline containing methanol (methyl or wood alcohol) that does not also contain cosolvents and corrosion inhibitors for methanol. Never use gasoline containing more than 5% methanol, even if it has cosolvents and corrosion inhibitors.

NOTE:

- Fuel system damage or engine performance problems resulting from the use of fuels that contain alcohol is not covered under the warranty. Honda cannot endorse the use of fuels containing methanol since evidence of their suitability is as yet incomplete.
- Before buying fuel from an unfamiliar station, try to find out if the fuel contains alcohol, if it does, confirm the type and percentage of alcohol used. If you notice any undesirable operating symptoms while using a gasoline that contains alcohol, or one that you think contains alcohol, switch to a gasoline that you know does not contain alcohol.

4 STARTING THE ENGINE

1. Turn the fuel valve to the ON position.

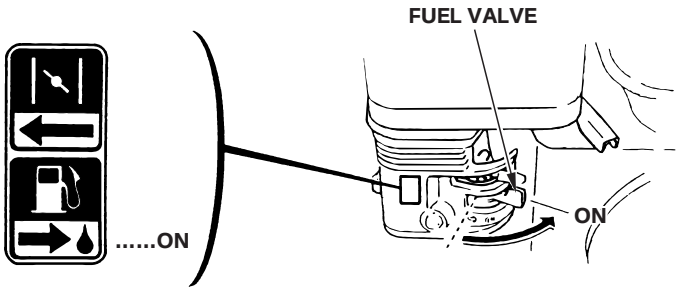

2. Move the choke lever to the CLOSED position.

NOTE:
Do not use the choke if the engine is warm or the air temperature is high.

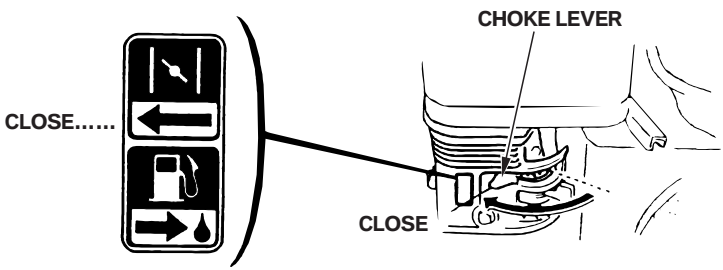

3. Move the throttle control lever slightly to the left.

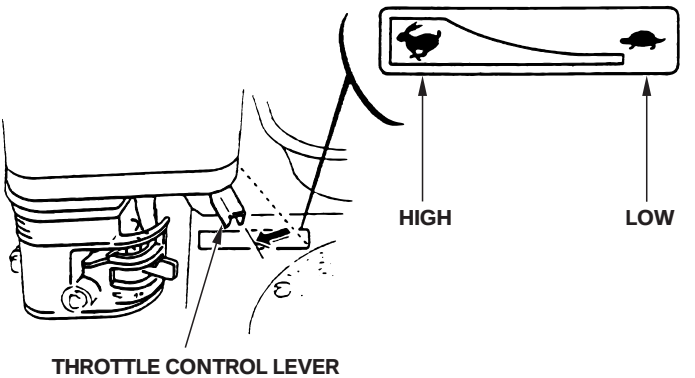

4. Start the engine.
- With recoil starter:
  Turn the engine switch to the ON position.

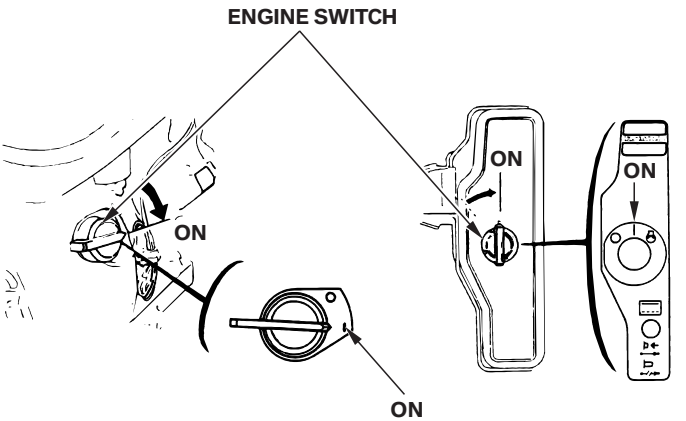

Pull the starter grip lightly until resistance is felt, then pull briskly.

CAUTION:
Do not allow the starter grip to snap back against the engine. Return it gently to prevent damage to the starter.

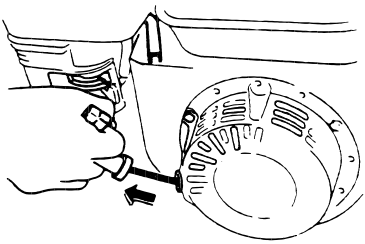

- With electric starter (where equipped):
  Turn the engine switch to the START position and hold it there until the engine starts.

NOTE:
Do not use the electric starter for more than 5 seconds at a time. If the engine fails to start, release the key and wait 10 seconds before operating the starter again.

When the engine starts, return the switch to the ON position.

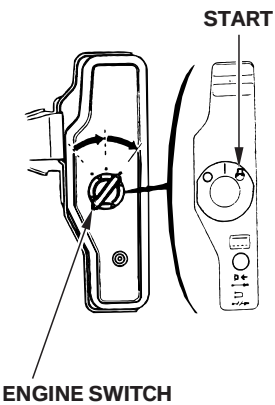

- **High altitude operation**

At high altitude, the standard carburetor air-fuel mixture will be excessively rich. Performance will decrease, and fuel consumption will increase.

High altitude performance can be improved by specific modifications to the carburetor. If you always operate the engine at altitudes higher than 1,830 m (6,000 feet) above sea level, have your authorized Honda dealer perform these carburetor modifications.

Even with suitable carburetor jetting, engine horsepower will decrease approximately 3.5% for each 305 m (1,000 feet) increase in altitude. The affect of altitude on horsepower will be greater than this if no carburetor modification is made.

CAUTION:

Operation of the engine at an altitude lower than the carburetor is jetted for may result in reduced performance, overheating, and serious engine damage caused by an excessively lean air/fuel mixture.

5 OPERATION

1. As the engine warms up, gradually move the choke lever to the OPEN position.

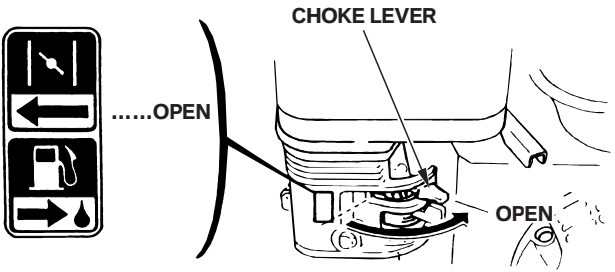

2. Position the throttle control lever for the desired engine speed.

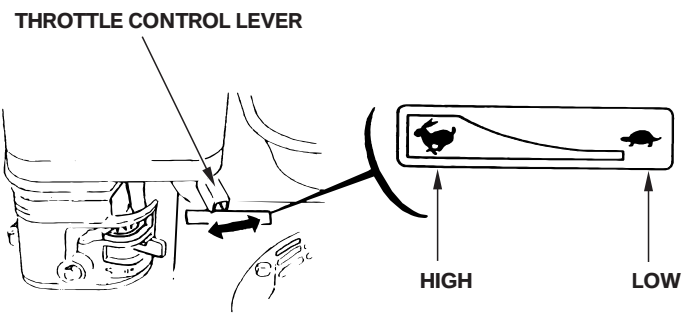

Oil alert system (Where equipped)
The Oil Alert System is designed to prevent engine damage caused by an insufficient amount of oil in the crankcase. Before the oil level in the crankcase can fall below a safe limit, the Oil Alert System will automatically stop the engine (the engine switch will remain in the ON position).

NOTICE

If the engine stops and will not restart, check the engine oil level (page 6) before troubleshooting in other areas.

Circuit breaker (for electric starter)
The circuit breaker protects the battery charging circuit. A short circuit or a battery connected in reverse polarity will trip the circuit breaker.

The green indicator inside the circuit breaker will pop out to show that the circuit breaker has switched off. If this occurs, determine the cause of the problem, and correct it before resetting the circuit breaker.

Push the circuit breaker button to reset.

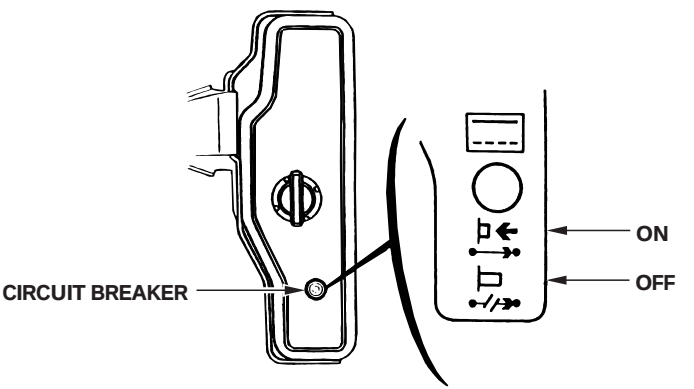

6 STOPPING THE ENGINE

To stop the engine in an emergency, turn the engine switch to the OFF position. Under normal conditions, use the following procedure:

1. Move the throttle control lever fully to the right.

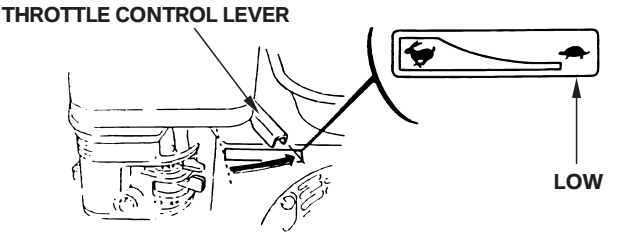

2. Turn the engine switch to the OFF position.

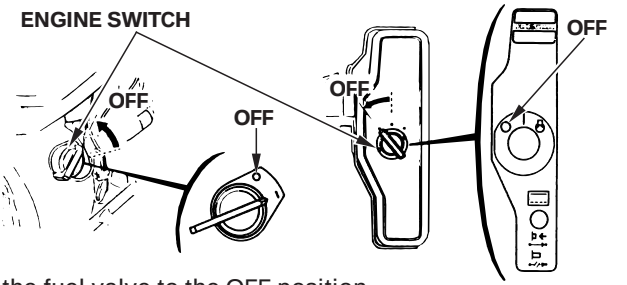

3. Turn the fuel valve to the OFF position.

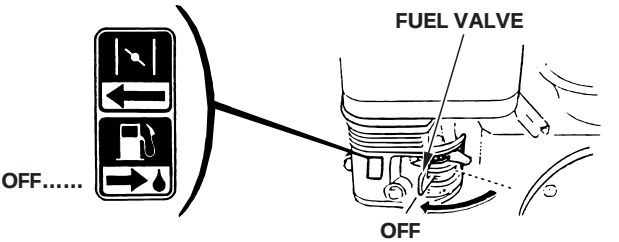

7 MAINTENANCE

⚠WARNING

- **Shut off the engine before performing any maintenance.**
- **To prevent accidental start-up, turn OFF the engine switch key and disconnect the spark plug cap.**
- **The engine should be serviced by an authorized Honda dealer unless the owner has proper tools and service data and feels he is mechanically qualified.**

CAUTION:

Use only genuine Honda parts or their equivalent. The use of replacement parts which are not of equivalent quality may damage the engine.

Periodic inspection and adjustment of the Honda engine is essential if high level performance is to be maintained. Regular maintenance will also ensure a long service life. The required service intervals and the kind of maintenance to be performed are described on the table below.

Maintenance Schedule

REGULAR SERVICE PERIOD Performed at every indicated month or operating hour interval, whichever comes first. ITEM		Each use	First month or 20 Hrs.	Every 3 month or 50 Hrs.	Every 6 month or 100 Hrs.	Every year or 300 Hrs.
Engine oil	Check level	○				
	Change		○		○	
Reduction gear oil (applicable models only)	Check level	○				
	Change		○			○
Air cleaner	Check	○				
	Clean			○(1)		
Sediment cup	Clean				○	
Spark plug	Check－Clean				○	
Spark arrester (optional part)	Clean				○	
Valve clearance	Check－Adjust					○(2)
Fuel tank and strainer	Clean					○(2)
Fuel line	Check (Replace if necessary)	Every 2 years (2)				

NOTE: (1):Service more frequently when used in dusty areas.

(2):These items should be serviced by an authorized Honda dealer, unless the owner has the proper tools and is mechanically proficient. See the Honda Shop Manual.

1. Oil change

Drain the oil while the engine is still warm to assure rapid and complete draining.

1. Remove the oil filler cap and drain plug to drain the oil.
2. Install the drain plug, and tighten it securely.
3. Refill with the recommended oil (see page 6) and check the oil level.
4. Install the oil filler cap.

ENGINE OIL CAPACITY: 0.60 ℓ (0.63 US qt , 0.53 Imp qt)

1/2 REDUCTION GEAR OIL CAPACITY:
0.50 ℓ (0.53 US qt , 0.44 Imp qt)

1/6 REDUCTION GEAR OIL CAPACITY:
0.15 ℓ (0.16 US qt , 0.13 Imp qt)

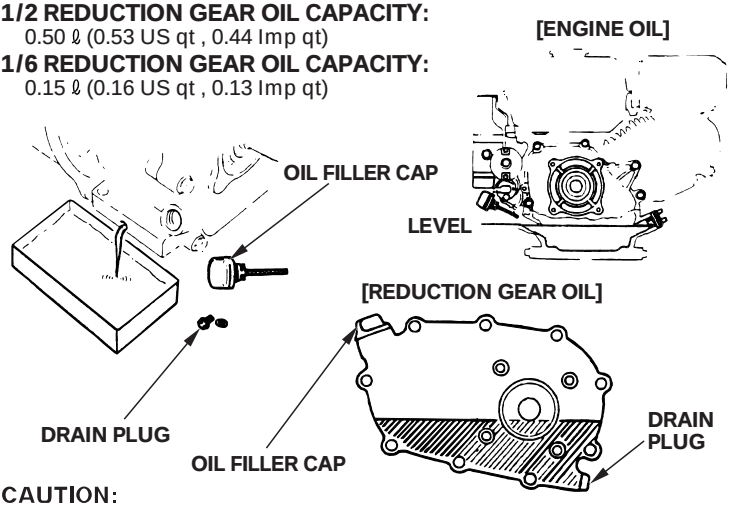

CAUTION:
Used motor oil may cause skin cancer if repeatedly left in contact with the skin for prolonged periods. Although this is unlikely unless you handle used oil on a daily basis, it is still advisable to thoroughly wash your hands with soap and water as soon as possible after handling used oil.

NOTE:
Please dispose of used motor oil in a manner that is compatible with the environment. We suggest you take it in a sealed container to your local service station for reclamation. Do not throw it in the trash, pour it on the ground, or down a drain.

2. Air cleaner service

A dirty air cleaner will restrict air flow to the carburetor. To prevent carburetor malfunction, service the air cleaner regularly. Service more frequently when operating the engine in extremely dusty areas.

⚠WARNING

Never use gasoline or low flash point solvents for cleaning the air cleaner element. A fire or explosion could result.

CAUTION:

Never run the engine without the air cleaner. Rapid engine wear will result.

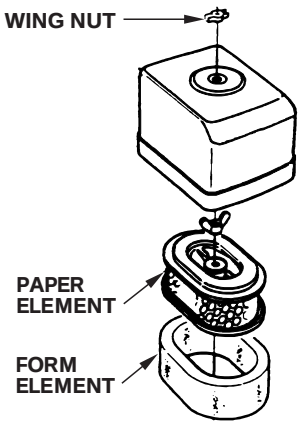

〈**Dual element type**〉

1. Remove the wing nut and the air cleaner cover. Remove the elements and separate them. Carefully check both elements for holes or tears and replace if damaged.
2. Foam element: Wash the element in a solution of household detergent and warm water, then rinse thoroughly, or wash in nonflammable or high flash point solvent. Allow the element to dry thoroughly.
   Soak the element in clean engine oil and squeeze out the excess oil. The engine will smoke during initial start-up if too much oil is left in the foam.
3. Paper element: Tap the element lightly several times on a hard surface to remove excess dirt, or blow compressed air through the filter from the inside out. Never try to brush the dirt off; brushing will force dirt into the fibers. Replace the paper element if it is excessively dirty.

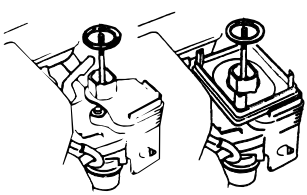

(GX120/160) (GX120/160/200)

〈**Cyclone type**〉

1. Remove the wing nut and the air cleaner cover. Remove the elements and separate them. Carefully check both elements for holes or tears and replace if damaged.
2. Foam element: Clean in warm soapy water, rince and allow to dry thoroughly. Or clean in high flash-point solvent and allow to dry. Dip the element in clean engine oil and squeeze out all the excess. The engine will smoke during initial start-up if too much oil is felt in the foam.

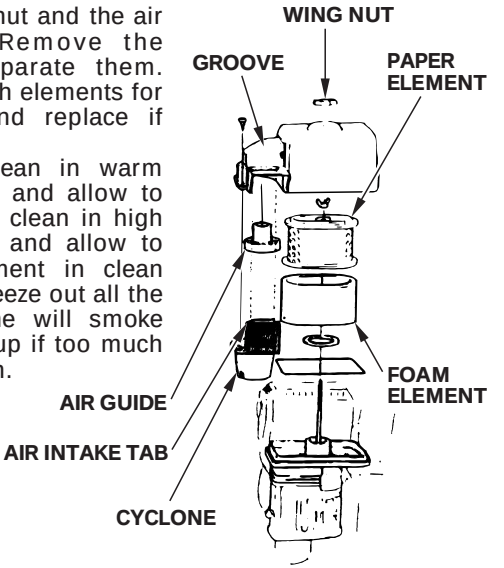

3. Paper element: Tap the element lightly several times on a hard surface to remove excess dirt, or blow compressed air through the filter from the inside out. Never try to brush the dirt off; brushing will force dirt into the fibers. Replace the paper element if it is excessively dirty.

(Cleaning the cyclone housing)

1. When the cyclone housing becomes dirty, unscrew the three special pan screws and wipe or wash the components with water. Next, thoroughly dry the components and carefully reassemble them.

CAUTION:

- **When reinstalling the cyclone, ensure that the tab on the air intake fits properly into the groove in the pre-cleaner cap.**
- **Be careful to install the air guide in the proper direction.**

〈**Semi-dry type**〉

1. Unscrew the wing nut, remove the air cleaner cover and remove the element.
2. Wash the element in a nonflammable or high flash point solvent and dry it thoroughly.
3. Soak the element in clean engine oil and squeeze out the excess oil.
4. Reinstall the air cleaner element and the cover.

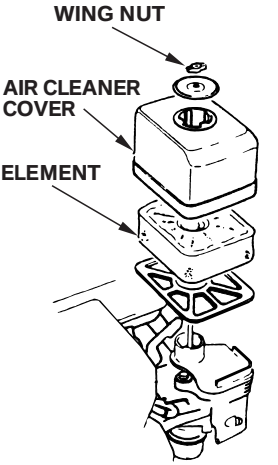

〈**Oil bath type**〉

1. Unscrew the wing nut, remove the air cleaner cover and remove the element.
2. Wash the element in a solution of household detergent and warm water, then rinse thoroughly, or wash in non-flammable or high flash point solvent. Allow the element to dry thoroughly.
3. Soak the element in clean engine oil and squeeze out the excess oil. The engine will smoke during intial start-up if too much oil is left in the element.
4. Empty the oil from the air cleaner case and wash out any accumulated dirt with nonflammable or high flash point solvent. Dry the case.
5. Fill the air cleaner case to the level mark with the same oil that is recommended for the engine (see engine oil recommendations on page 6).
6. Reinstall the element and the cover.

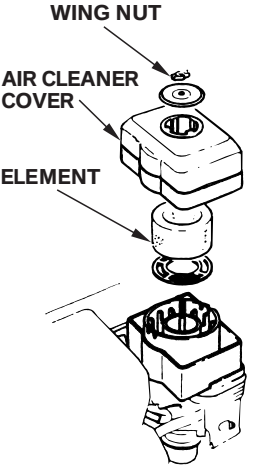

3. Sediment cup cleaning

⚠WARNING

- **Gasoline is extremely flammable and is explosive under certain conditions. Do not smoke or allow flames or sparks in the area.**
- **After installing the sediment cup, check for leaks, and make sure the area is dry before starting the engine.**

Turn the fuel valve to OFF. Remove the sediment cup and O-ring, and wash them in nonflammable or high flash point solvent. Dry them thoroughly and reinstall securely. Turn the fuel valve ON and check for leaks.

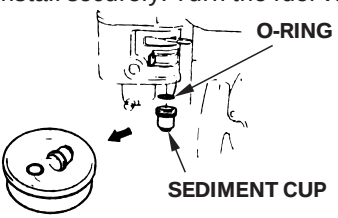

4. Spark plug service

Recommended spark plug: BPR6ES (NGK)
W20EPR-U (DENSO)

CAUTION:
Never use a spark plug of incorrect heat range.

To ensure proper engine operation, the spark plug must be properly gapped and free of deposits.

1. Remove the spark plug cap and use the proper size spark plug wrench to remove the spark plug.

⚠WARNING

If the engine has been running, the muffler will be very hot. Be careful not to touch the muffler.

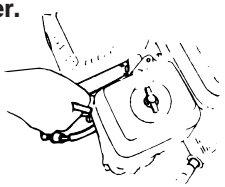

2. Visually inspect the spark plug. Discard the spark plug if there is apparent wear, or if the insulator is cracked or chipped. Clean the spark plug with a wire brush if it is to be reused.
3. Measure the plug gap with a feeler gauge. Correct as necessary by bending the side electrode.
   The gap should be:
   0.70－0.80 mm (0.028－0.031 in)

4. Check that each spark plug washer is in good condition, and thread the spark plug in by hand to prevent cross-threading.
5. After the spark plug is seated, tighten with a spark plug wrench to compress the washer.

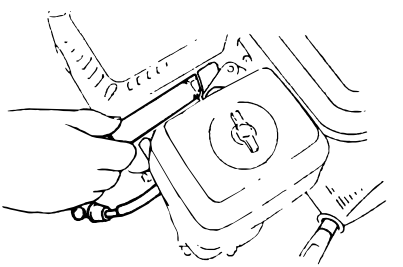

NOTE:
When installing a new spark plug, tighten 1/2 turn after the spark plug seats to compress the washer. When reinstalling a used spark plug, tighten 1/8－1/4 turn after the spark plug seats to compress the washer.

CAUTION:
The spark plug must be securely tightened. An improperly tightened spark plug can become very hot and may damage the engine.

5. Spark arrester maintenance (optional part)

⚠WARNING

If the engine has been running, the muffler will be very hot. Allow it to cool before proceeding.

CAUTION:

The spark arrester must be serviced every 100 hours to maintain its efficiency.

1. Remove the two 4 mm screws from the exhaust deflector, and remove the deflector.
2. Remove the four 5 mm screws from the muffler protector, and remove the muffler protector.
3. Remove the two 4 mm screw from the spark arrester, and remove the spark arrester from the muffler.

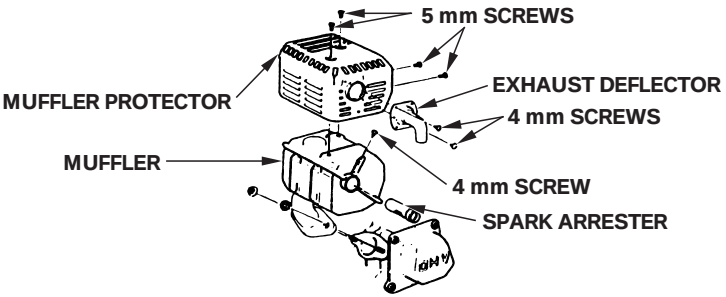

4. Use a brush to remove carbon deposits from the spark arrester screen.

CAUTION:

Be careful not to damage the spark arrester screen.

NOTE:

The spark arrester must be free of breaks and holes. Replace, if necessary.

5. Install the spark arrester and the muffler in the reverse order of disassembly.

6. Carburetor idle speed adjustment

1. Start the engine and allow it to warm up to normal operating temperature.
2. With the engine idling, turn the throttle stop screw to obtain the standard idle speed.

Standard idle speed: 1,400 $\pm \begin{smallmatrix}200\\150\end{smallmatrix}$ rpm.

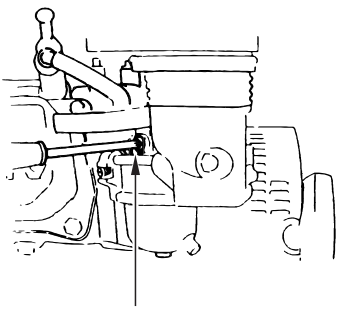

8 THROTTLE AND CHOKE CONTROL CABLE (optional part)

The throttle and choke control levers are provided with holes for optional cable attachment. The following illustrations show installation examples for a solid wire cable and for a braided wire cable. If using a braided wire cable, add a return spring as shown. It is necessary to loosen the throttle lever friction nut when operating the throttle with a remote cable.

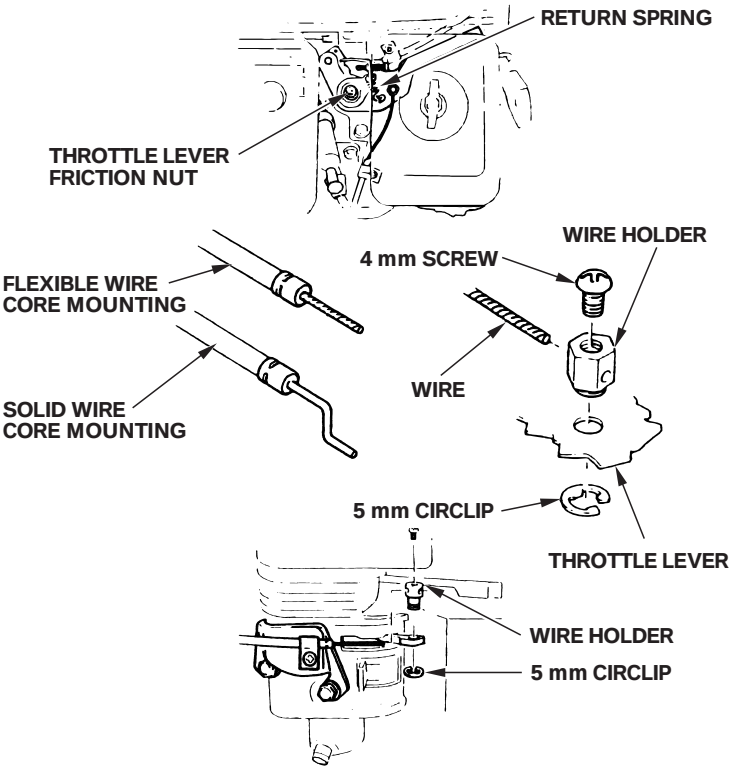

9 TRANSPORTING/STORAGE

⚠WARNING

When transporting the engine, turn the fuel valve OFF and keep the engine level to prevent fuel spillage. Fuel vapor or spilled fuel may ignite.

Befor storing the unit for an extended period;

1. Be sure the storage area is free of excessive humidity and dust.
2. Drain the fule…

⚠WARNING

Gasoline is extremely flammable and is explosive under certain conditions. Do not smoke or allow flames or sparks in the area.

a. With the fuel valve in the OFF position, remove and empty the sediment cup.
b. Turn the fuel valve to the ON position and drain the gasoline from the fuel tank into a suitable container.
c. Replace the sediment cup and tighten securely.
d. Drain the carbretor by loosening the drain screw. Drain the gasoline into a suitable container.

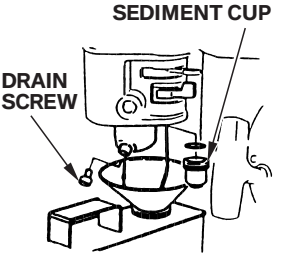

3. Change the engine oil (page 20).
4. Remove the spark plug and pour about a tablespoon of clean engine oil into the cylinder.
   Crank the engine several revolutions to distribute the oil, then reinstall the spark plug.
5. Pull the starter rope slowly until resistance is felt.Continue polling until the notch on the starter pulley aligns with the hole on the recoil starter (see illustration below). At this point, the intake and exhaust valves are closed, and this will help to protect the engine from internal corrosion.

Align the mark on the starter pulley with the hole at the top of recoil starter.

6. Electric starter type: Remove the battery and store it in a cool;, dry place. Recharge it once a month.
7. Cover the engine to keep out dust.

10 TROUBLESHOOTING

Engine will not start using recoil starter:
1. Is the engine switch in the ON position?
2. Is there enough oil in the engine?
3. Is the fuel valve ON?
4. Is there fuel in the fuel tank?
5. Is gasoline reaching the carburetor?
   To check,loosen the drain screw with the fuel valve ON?

⚠WARNING

If any fuel is spilled, make sure the area is dry before testing the spark plug or starting the engine. Fuel vapor or spilled fuel may ignite.

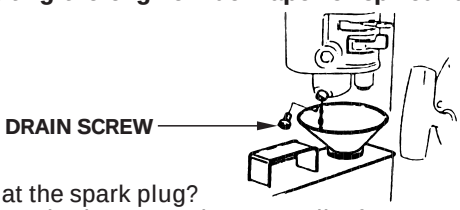

6. Is there a spark at the spark plug?
   a. Remove the spark plug cap. Clean any dirt from around the spark plug base, then remove the spark plug.
   b. Install the spark plug in the plug cap.
   c. Turn the engine switch ON.
   d. Grounding the side electrode to any engine ground, pull the recoil starter to see if sparks jump across the gap.
   e. If there is no spark, replace the plug.
      If OK, reinstall the spark plug and try to start the engine again according to the instructions.
7. If the engine still dose not start, take the engine to an authorized Honda dealer.

Engine will not start, using electric starter:
1. Are the battery cables securely connected and free of corrosion?
2. Is the battery fully charged?

NOTE:
If the engine does not charge the battery, check the circuit breaker.
3. If the starter motor operates, but the engine wil not start, follow the troubleshooting procedure described under recoil starter operation.

11 SPECIFICATIONS

*Dimensions	GX 120	GX 160	GX 200
Power equipment description code	GC01	GC02	GCAE
Length	300 mm (11.8 in)	305 mm (12.0 in)	313 mm (12.3 in)
Width	345 mm (13.6 in)	365 mm (14.4 in)	376 mm (14.8 in)
Height	320 mm (12.6 in)	335 mm (13.2 in)	335 mm (13.2 in)
〈 Length 〉		〈305 mm (12.0 in)〉	〈313 mm (12.3 in)〉
〈 Width 〉		〈385 mm (15.2 in)〉	〈395 mm (15.6 in)〉
〈 Height 〉		〈335 mm (13.2 in)〉	〈335 mm (13.2 in)〉
Dry weight	12.0 kg (26.5 lbs)	14.0 kg (30.9 lbs)	16.0 kg (35.3 lbs)
		〈16.0 kg (35.3 lbs)〉	〈17.9 kg (39.5 lbs)〉

〈 〉: Electric starter model

Engine

Engine type	4-stroke, over head valve, 1 cylinder		
Displacement	118 cm^3 (7.2 cu-in)	163 cm^3 (9.9 cu-in)	196 cm^3 (12.0 cu-in)
Bore×Stroke	60 x 42 mm (2.4 x 1.7 in)	68 x 45 mm (2.7 x 1.8 in)	68 x 54 mm (2.7 x 2.1 in)
Max. output	2.9 kW/4,000 rpm	4 kW/4,000 rpm	4.8 kW/3,600 rpm
Max. torque	0.75 kg-m (5.4 ft-lb)/ 2,500 rpm	1.1 kg-m (8.0 ft-lb)/ 2,500 rpm	1.35 kg-m (9.8 ft-lb)/ 2,500 rpm
Fuel consumption	230 g/PSh		
Cooling system	Forced air		
Ignition system	Transister magneto		
PTO shaft rotation	Counterclockwise		

*: ''S''type

NOTE:
Specifications may vary according to the types, and are subject to change without notice.

With cyclone air cleaner

*Dimensions	GX 120	GX 160	GX 200
Power equipment description code	GC01	GC02	GCAE
Length	310 mm (12.2 in)	345 mm (13.6 in)	313 mm (12.3 in)
Width	410 mm (16.1 in)	420 mm (16.5 in)	430 mm (16.9 in)
Height	325 mm (12.8 in)	335 mm (13.2 in)	335 mm (13.2 in)
Dry weight	12.0 kg (26.5 lbs)	14.0 kg (30.9 lbs)	16.0 kg (35.3 lbs)

Engine

Engine type	4-stroke, over head valve, 1 cylinder		
Displacement	118 cm^3 (7.2 cu-in)	163 cm^3 (9.9 cu-in)	196 cm^3 (12.0 cu-in)
Bore×Stroke	60 x 42 mm (2.4 x 1.7 in)	68 x 45 mm (2.7 x 1.8 in)	68 x 54 mm (2.7 x 2.1 in)
Max. output	2.9 kW/4,000 rpm	4 kW/4,000 rpm	4.8 kW/3,600 rpm
Max. torque	0.75 kg-m (5.4 ft-lb)/ 2,500 rpm	1.1 kg-m (8.0 ft-lb)/ 2,500 rpm	1.35 kg-m (9.8 ft-lb)/ 2,500 rpm
Fuel consumption	230 g/PSh		
Cooling system	Forced air		
Ignition system	Transister magneto		
PTO shaft rotation	Counterclockwise		

*: ‘‘S’’type

NOTE:
Specifications may vary according to the types, and are subject to change without notice.

MEMO

Head office :
HONDA EUROPE N.V.
European Engine Center
Langerbruggestraat 104, B-9000 GENT
TEL. +32(0)9 250 12 11
FAX +32(0)9 250 14 24
VAT: BE 418.250.835 - HRG 125.024
Fortis Bank : BE33 2900 0170 0046
BIC GEBABEBB
www.honda-engines-eu.com

United Kingdom selling agent :
HONDA ENGINES
Honda Logistic Centre(UK)Ltd.
Unit 3210, Wellington Parkway
Magna Park Lutterworth
Leicestershire LE 17 4JQ
United Kingdom
TEL. +44(0)1 45 55 59 429
FAX +44(0)1 45 55 59 428